ZONE	LTR.	DESCRIPTION	ECN NO.	DATE	BY	APPR'D
	A	RELEASED FOR QUOTE	-----	10DEC09	SLK	JRR
	B	B1 80.0 WAS 250.0 B2 292.0 WAS 40.0	DR25839	08JAN10	SLK	JRR
	C	RELEASED FOR PRODUCTION	72805	28APR10	SLK	JRR

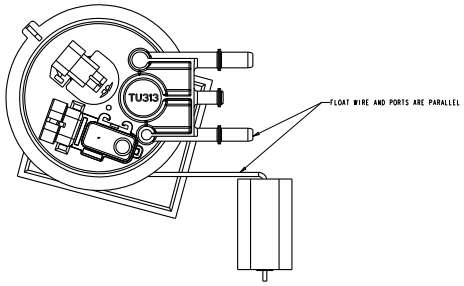

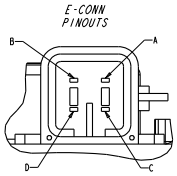

A- LEVEL SENDER
B- PUMP (+)
C- PUMP (-)
D- LEVEL SENDER

SCALE 3:1

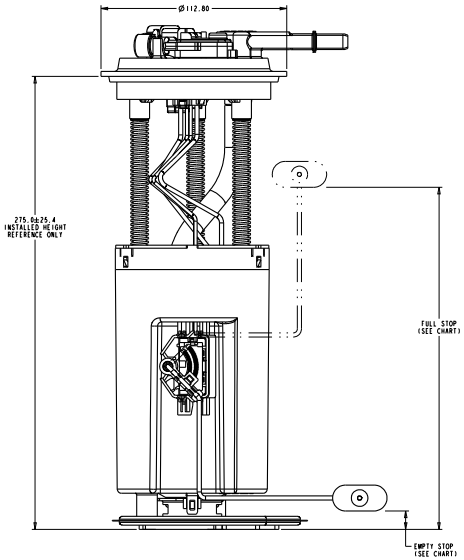

LEVEL SENDER		
POINT	HEIGHT	OHMS
FULL STOP	206.5	80.0
EMPTY STOP	10.0	292.0

NOTES:

1. CHANGE IN DESIGN, COMPOSITION, LOCATION OR PROCESSING FROM THE PART PREVIOUSLY APPROVED FOR PRODUCTION REQUIRES PRIOR APPROVAL BY TI AUTOMOTIVE
2. MODULE TO BE PACKAGED USING COMPONENTS NOTED ON BOM SO THAT CONTAMINATION FROM FOREIGN MATERIAL IS PREVENTED:
   - PLUG PROTECTORS ON PORTS
   - POLYBAG

THIS DRAWING IS THE PROPERTY OF TI AUTOMOTIVE. IT IS SUBMITTED IN CONFIDENCE AND MUST NOT BE DISCLOSED TO OTHERS OR REPRODUCED, EXCEPT AS NECESSARY TO OBTAIN QUOTATIONS FROM VENDORS WHO HAVE A SIMILAR CONFIDENTIALITY AGREEMENT WITH TI AUTOMOTIVE. THIS DRAWING AND ALL INFORMATION CONTAINED HEREIN IS TO BE RETURNED UPON REQUEST OR UPON COMPLETION OF THE QUOTATION.

◆ DENOTES ASSEMBLY/TEST/PROCESS
◆ DENOTES SAFETY CHARACTERISTIC
◊ DENOTES SIGNIFICANT CHARACTERISTIC

INTERNAL USE ONLY
DISTRIBUTION CODE
AF

REF.

DO NOT SCALE PRINT

DIMENSIONS AND TOLERANCES PER INSTITUTE OF ENGINEERING

PROJECTION

PRO-E

E SIZE

TI Automotive
AFTERMARKET DIVISION
1200 COLUMBIA STREET
CARO, MICHIGAN 48723

TOLERANCE UNLESS OTHERWISE SPECIFIED:
.X ±0.25
.XX ±0.13
.XXX ±0.07
ANGLES ±1.0°
FRACTIONS ±1/64

MATERIAL

FINISH

SCALE: 1:1 DATE: 10DEC09
DR'N BY: S. RADY
CHK'D BY:
APPR'D BY: J. ROSENSTANGEL

TITLE
TOP LEVEL ASSEMBLY

DRAWING NO. TU313
REV. C